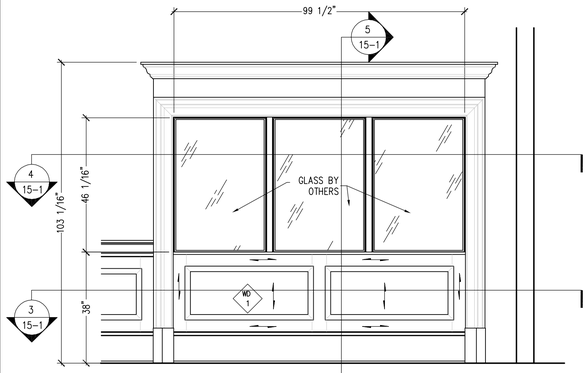

1 ELEVATION — SANCTUARY SIDE
15-1 SCALE: 1/2"=12" REF: E5/A606

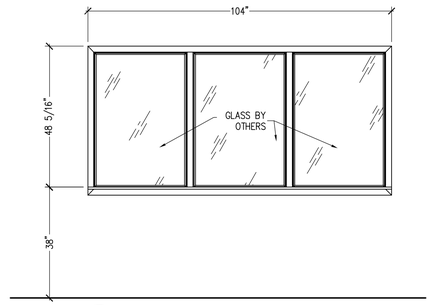

2 ELEVATION — FAMILY RM SIDE
15-1 SCALE: 1/2"=12" REF: NONE

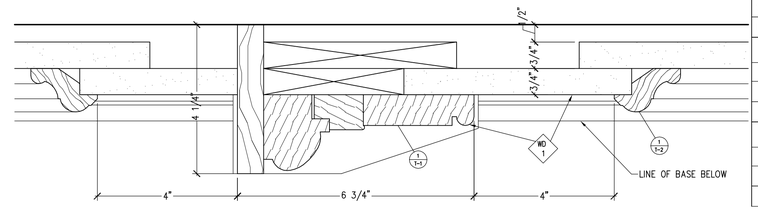

8 CASING DETAIL
15-1 SCALE: 6" = 1'- 0" REF: C7/A602

MATERIAL SPECIFICATIONS		
TYPE	DESCRIPTION	M.R.
CORE	MDF	
VENEER	WD-1 Plain Sliced Cherry	
SOLID	WD-1 Plain Sawn Cherry	
FINISH	WD-1, MATCH SAMPLE	

HARDWARE LIST		
QTY:	DESCRIPTION	M.R.

INFORMATION SYSTEMS			
ITEM #	DESCRIPTION	CUST.	PROD.

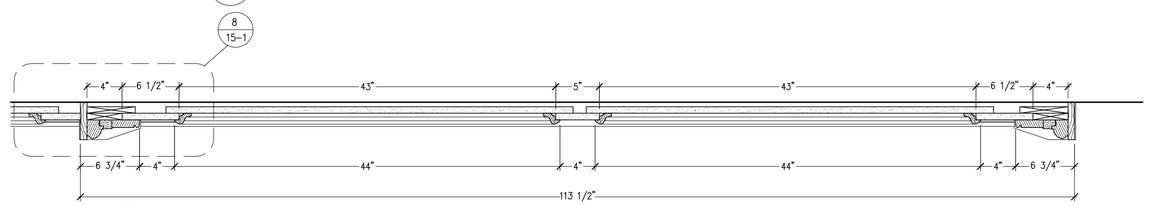

3 HORIZONTAL SECTION
15-1 SCALE: 1-1/2" = 1'- 0" REF: NONE

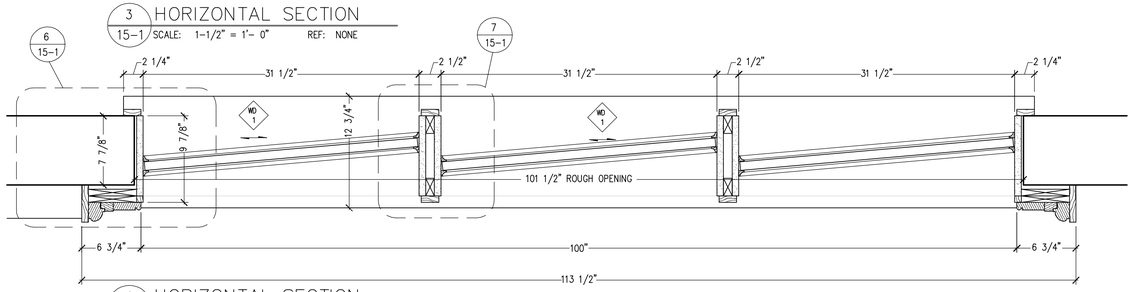

4 HORIZONTAL SECTION
15-1 SCALE: 1-1/2" = 1'- 0" REF: A11/A031, M7/A606

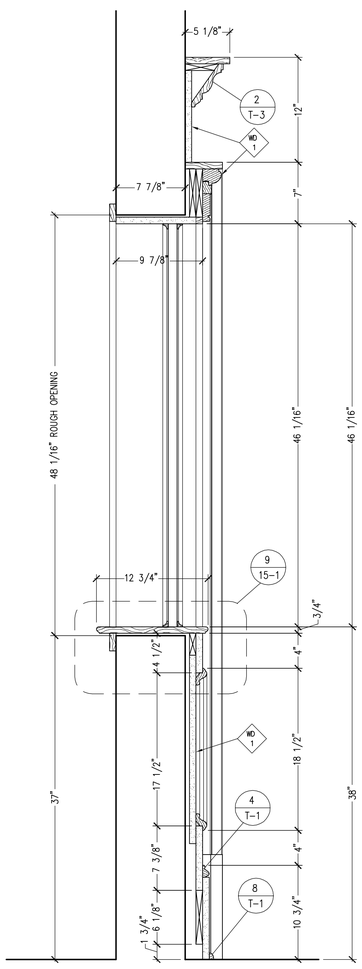

5 VERTICAL SECTION
15-1 SCALE: 1-1/2" = 1'- 0" REF: NONE

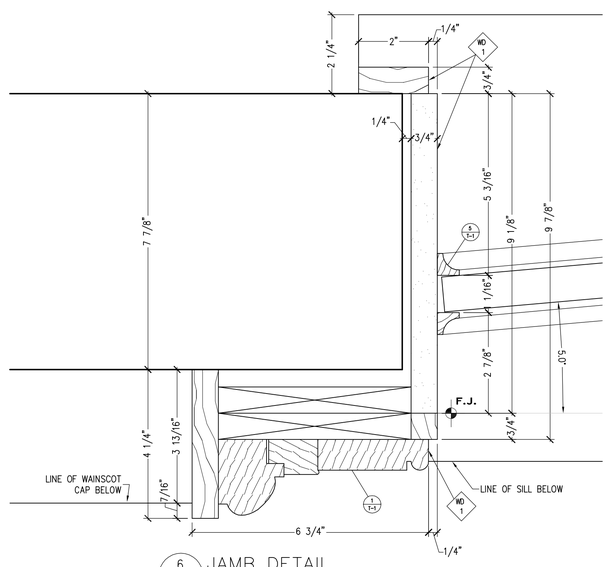

6 JAMB DETAIL
15-1 SCALE: 6" = 1'- 0" REF: A11/A031, M7/A606

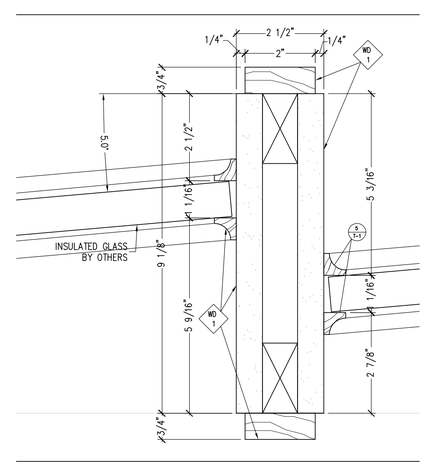

7 MULLION DETAIL
15-1 SCALE: 6" = 1'- 0" REF: A11/A031, M7/A606

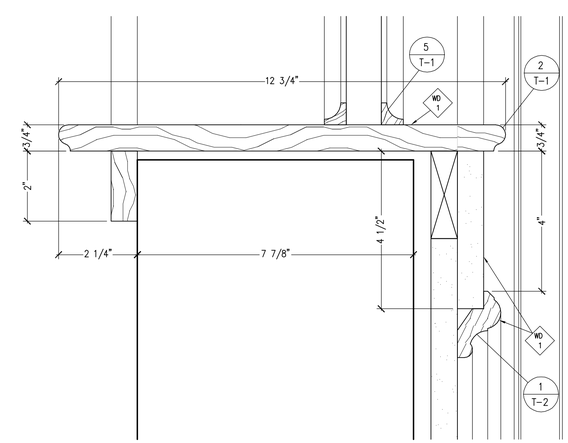

9 SILL DETAIL
15-1 SCALE: 6" = 1'- 0" REF: G11/A031, J4/A606

PROJECT NO.

CUTBILL NO.

PSI WORK ORDER NO.

SCALE
AS NOTED

DRAWN BY: TM
DATE: 10/31/05

DELIVERY DATE

REVISIONS		
NO.	DATE	DESCRIPTION
1		
2		
3		
4		
5		
6		
7		
8		
9		
10		
11		
12		

SHEET NO.
15-1

PRELIMINARY